III. International Conference on Electrical, Computer and Energy Technologies (ICECET 2023)
16-17 November 2023, Cape Town-South Africa

Drift Compensation of Wearable Textile Sensors in Mobile Applications

Phillip Petz*, Martina Zeinzinger*, Florian Eibensteiner*, Josef Langer* and Roland Aigner**
Embedded Systems lab,*Media Interaction Lab*
UAS Upper Austria, Hagenberg, Austria
Email: phillip.petz@fh-hagenberg.at, martina.zeinzinger@fh-hagenberg.at,
florian.eibensteiner@fh-hagenberg.at, josef.langer@fh-hagenberg.at, roland.aigner@fh-hagenberg.at

***Abstract*—This paper presents a novel approach to address the challenges associated with the long-term use of conductive textiles as sensors, a critical area of research for the sustainable use of smart textiles. The key advancement over the existing state-of-the-art is the development of simple techniques for compensating for the effects of aging and degradation effects in mobile scenarios on resource-limited embedded systems. Through accelerated aging tests and cyclic stress tests, we demonstrate how integrated measurement circuits can be used to detect and compensate for aging effects. We also provide a software-based solution to complement mechanical protective measures. We were able to show that after the initial calibration and model determination, no further communication with a server structure is required for the adaptation of sensor models or their drift compensation.**

***Index Terms*—Sensor Drift Compensation, Wearable Sensors, Smart Textiles, Embedded Systems**

I. Introduction

By configuring the textile and conductive material in production, unobtrusive sensors [1], [2] and actuators [3] can be manufactured. The range of applications for these sensors and actuators extends from human-machine interfaces [4], [5] to body-worn sensor systems [6] with additional applications in protective, work or leisure clothing. The selection of conductive materials affects the overall conductivity and electrical characteristics [7], the degradation of the composite material induced by wear and behavior and the associated service life [8]. Since the separation and recycling of these materials at the end of the product life cycle involves considerable effort [9], [10], improving useful life is crucial to sustainability [11] and the usability of the products. This is especially true for products containing silver and copper [12], [13], which require large amounts of energy to recycle [14].

Despite the current interest in research, there are still challenges and problems that need to be solved for the widespread and durable use of textile sensors. The first problem is the durability of prototypes, which is usually defined by load cycles until failure [15], while information on progress is often dismissed. In previous work, we have attempted to address this problem using real-world examples. The behavior of conductive textiles such as resistive [2], capacitive [16] and inductive [17] sensors, as well as conductive tracks [18] and networks [6] has been investigated and characterized. We have also presented a new approach for an automated test tool to characterize the behavior of conductive textiles in an iterative loop for rapid prototyping, simulation of new sensors, and the creation of models for the degradation process [19].

Another problem with respect to textile sensors is that there is little research and literature on the aging of conductive textiles, with the exception of [20]. While the aging of traditional textiles has been extensively studied [21]–[23], the introduction of conductive elements adds a new layer of complexity due to their unique functional aging dependencies. To the best of our knowledge, no methods have yet been explored to compensate for degradation and aging in conductive textiles, particularly on resource-limited devices. Therefore, we investigated the influences of mechanical aging, particularly by the abrasion of planar coatings in [24]. The behavior under tensile, compressive and chemical stress was investigated in [8]. The behavior of conductive textiles under the influence of washing by simultaneous chemical and mechanical abrasion was studied in [18]. The determination and detection of defects is currently based on either electrical resistance [25] or optical inspection [26]. However, there are a variety of electrical measurement methods that can provide a better determination or other information on the condition of the material, which are not currently used [27]. We have provided a comprehensive summary of suitable electrical measurement methods in [27] with basic aging detection algorithms in [18] and [24]. This was done at the use case level, as they are highly individual in their behavior.

The rise of data-driven compensation approaches has significantly influenced the field of sensor data acquisition, offering promising solutions to compensate for errors and degradation over time [28]–[30]. The application of machine learning techniques to these data has shown potential to improve the accuracy and reliability of the data [31]. However, when considering mobile applications, the feasibility of machine learning is constrained by factors such as computational power, hardware resources, and energy limitations. Given these constraints, our research has chosen to focus on traditional

The work was made possible by funding from the Austrian Research Promotion Agency FFG (FFG 899030).

and well-established methods of drift compensation. We aim to adapt these methods for use on embedded devices, acknowledging that the implementation of machine learning on resource-limited devices is beyond the scope of this work. This approach aligns with our commitment to practical and sustainable solutions for the long-term use of conductive textiles as sensors.

Various methods can be used for drift compensation, each with its own advantages and disadvantages. Recursive Least Squares (RLS) [32] is suitable for online applications, but its drawback lies in its high computational complexity. Kalman filtering [33] provides optimal estimation, but requires precise system modeling and is computationally intensive. Support Vector Regression (SVR) [34] is effective for nonlinear drift, with the clear benefit of requiring careful parameter selection. Gaussian Process Regression (GPR) [35] offers flexibility but comes with computational expenses. Ensemble methods improve accuracy while introducing increased complexity. Bayesian inference [36] handles noise and drift but is computationally demanding. Fuzzy Logic Control [37] handles non-linear drift but exhibits tuning complexity and limited interpretability. In particular, linear regression [38] provides the advantage of efficiency, making it a desirable option for drift compensation, if the application allows its use.

II. Concept

The example of a textile sensor used in this paper was knitted on a KARL MAYER STOLL flat bed knitting machine of type ADF 530-32 KI W Multi Gauge, at gauge E 7.2. It is made up of *Twill* knitting patterns, which are repetitions of knit-miss-knit-miss sequences shifted by one needle for each subsequent course (cf. Fig. 1). The high number of miss stitches makes the fabric highly stable along courses (horizontally) and highly extensible along wales (vertically). As for the topology, the knitted fabric consists of a supporting non-functional substrate layer knitted on the front bed and an augmented sensing part knitted on the opposite bed. A resistive yarn is used for the sensing field, and the top and bottom edges are connected by conductive traces that lead to the edge of the textile to connect the readout electronics. Both faces are closely interconnected by tucking the yarn of the front face with each of the loops of the resistive yarn on the back bed. For resistive yarn, we used eight threads of Shakespeare® Resistat P6204[1], which is a den 100/24 polyester fiber with a carbon sheath and a linear electrical resistance of 10 MΩ/m. For the conductive traces, we used two silver-coated Shieldex® threads Madeira HC40[2], which is a PA yarn with den 260 and an electrical resistance of <300 Ω/m. Four PES threads (den,150/30 PES from TWD Fibers GmbH) were plated together with two Lycra threads (den,140 Lycra core covered with PES den 150/20) as the support substrate to reduce wear-out effects.

However, the problems described for the sensors with extended dwell time also occur with other sensor types and materials, such as embroidered, screen-printed, or woven sensors. A picture of our knitted sensor with the respective tensile direction and underlying structure is shown in Fig. 1.

Fig. 1. Image of our knitted textile sensor. The force is applied along the wales (vertically) of the material. The sensing material is warped horizontally in wale direction due to the elasticity of the sensor material as well as the accumulation of material at the top and bottom. The knit-miss-knit-miss structure is shown in the upper right corner.

The first step was to extend a test environment that mimics the conditions under which the sensors will be used to collect data during accelerated aging tests. In the test environment created, first presented in [7], the strain-sensitive textile is pulled to a predefined length and the resulting force and resistance are measured. The next step is to collect calibration data, which is done by placing the textile sensors in the test environment and recording their output. The output or measured resistance of the textile is then compared with the actual values of the measured parameter, such as the end position of the sled or the resulting elongation. The elongation was calculated by measuring the change in length from the initial length at the resting position. Calibration coefficients are used to adjust the sensor output to match the actual values of the measured parameter. This is done by applying a mathematical formula that maps the sensor output to the actual measured physical parameter. A simple example of such a formula would be a linear regression equation. Once the calibration coefficients are calculated, the next step is implementation on the embedded device. The calibration coefficients are typically stored in the read-only memory (ROM) of the microcontroller or in the software (in flash) that interfaces with the raw sensor readings. They are then used to adjust the sensor output to match the actual values of the measured parameter. The test environment we used and adapted is illustrated in Fig. 2.

Compensation data or general usage behavior information is collected over time to identify any change in sensor output. These data are then used to identify any drift in sensor output over time. After collecting the compensation data, the next step is to calculate the compensation coefficients.

The compensation coefficients are used to adjust the sensor output to correct for any drift in the sensor output over time. The next step is again to calculate and implement the compensation coefficients, which are stored in the microcontroller or the software that interfaces with the sensors.

[1] https://shakespeare-pf.com/product/polyester/

[2] https://www.shieldex.de/products/madeira-hc-40/

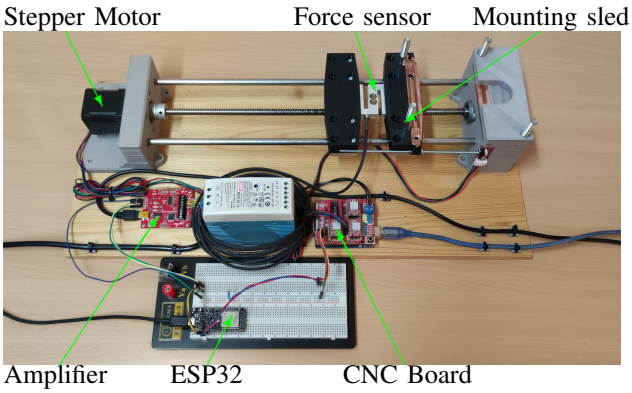

Fig. 2. Test system with an ESP32 (initiates the measurements),a CNC control board and a stepper motor. The resulting forces are measured using a load cell and a load cell amplifier. The ESP32 also measures the resistance of the conductive textile.

The concept of drift compensation involves the same mathematical algorithms and techniques used in the previous steps to correct for drift in the sensor output and improve the accuracy of the collected data. The signal processing step involves analyzing the sensor output over time and identifying patterns or trends that indicate drift. The signal processing algorithm can then adjust the sensor output to correct for drift and improve the accuracy of the collected data. However, the requirements for the algorithms are determined by the underlying hardware. In our case, it is a dual-core Tensilica LX6 microprocessor with up to 240 MHz, 520 kB SRAM, 448KB ROM, and 4 MB Flash. This is a very powerful microcontroller which is more than capable of collecting sensor data and generating simple models. We chose this controller because of its popularity in the scientific community. Therefore, the biggest requirement is not to store too many measured values for our calculation.

The creation of models on the microcontroller has several advantages over a more traditional approach. The traditional approach would require measuring real-world sensor data on the target system, which would then be transferred to a more powerful system for model creation. The steps usually involve some preprocessing steps, such as filtering, labeling, and splitting into training and test data sets. The model is then trained with the training dataset and then optimized for embedded systems. Optimization includes pruning and changing the datatypes of the weights used. Some target systems even require the transition from floating-point to fixed-point data types. Since this change is associated with a loss of achievable accuracy, an additional evaluation step is included to assess the accuracy of the model after optimization. In this cycle, the optimization parameters are adjusted until the model can be computed with sufficient accuracy on the target hardware or all parameter options are exhausted.

The new approach implies that computation is performed directly on the device and that data and models no longer need to be transferred across device boundaries. While training on a connected laptop or PC is not yet a major problem, in practice it is not profitable to manually retrain a larger number of devices in this way, so solutions with servers to be replaced are used in operation. Here, centralized storage of multiple data sources poses a potential security risk, which, by design, cannot occur with local training. After recording, the same steps are performed on the embedded system as on the more powerful systems, whereby the selected models are limited by their lower complexity from the start. A comparison of the two approaches can be seen in Fig. 3.

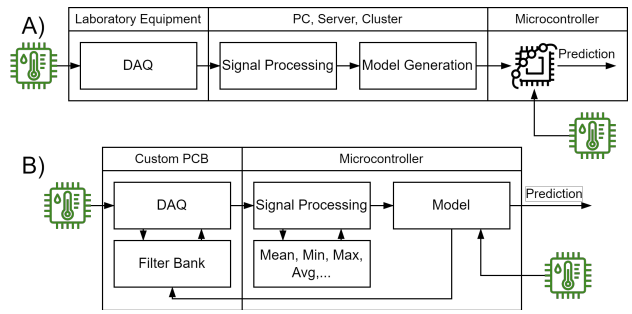

Fig. 3. A) Traditional model development, where a sensors is used to collect an initial dataset. A powerful system preprocesses the dataset and creates a model. After training, optimization, and evaluation, the model is transferred to an embedded system for inference. B) The embedded system records an initial dataset, calculates statistics, and creates a linear approximation based on a uniformly distributed training set. The statistical characteristics are later used as a reference for degradation estimation.

III. Experimental Results

As described in Section II, the textile sensors were mounted on the test stand and characterized with load curves. Since the movement of the textile already leads to a large change in resistance even without any change in the length of the material, a ramp with pauses at the respective change in length was introduced as the load profile. The resistance range of the textile at the start of the test is 3 kΩ at rest (10 cm) and 12 kΩ under the selected load (25 cm). The resistance of the textile was measured using several adjustable voltage dividers and the analog to digital (ADC) input of the ESP32. In order to cover a larger measuring range, different series resistors were used. Accuracy and true resistance were measured using a Keithley SMU in a four-point measurement setup. The measured values were saved locally and also transferred to a local database via the WLAN connection provided for visualization purposes. A diagram of the first three measurement cycles can be seen in Fig. 4. The purple dotted line shows the true distance, and the yellow line shows the recorded resistance from the ESP32. The ESP32 used the measured values shown in Fig. 4 for an initial calibration function, with results with the smallest error to:

$$Elongation[cm] = 1.7e^{-3} * R_{Tex}[\Omega] + 3.864 \qquad (1)$$

During this initial calibration, the ESP32 knows the true distance and the true force. The calibration function is a linear approximation in the form of $y = k * x + d$, where y is the predicted value, x is the input or measured resistance, k is the slope of the calibration function and d is the offset or theoretical basic resistance at a distance of 0 cm. We chose this

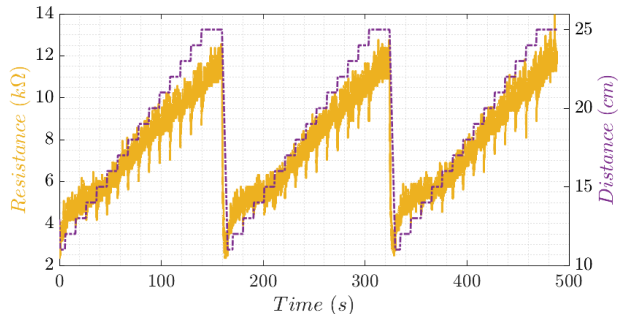

Fig. 4. The graph shows the change in resistance in yellow with a deviation from its resting or starting position of 10 cm in purple over three test cycles. This shows the sensor response at the start of the test.

approach because it is the simplest way to calculate calibration and drift in a resource-limited system.

As the textile sensor does not measure deformation when the textile is at rest, respectively, at a length of 10 cm, it is clear that a reduction would not lead to a resistance of 3.864 Ω at a distance of 0 cm. The method assumes that the sensor response is linear over a particular range of input values, and thus the output can be represented by a linear equation. As we do not want to measure negative deformation and therefore set the valid input range to elongations from the initial 10 cm, we can neglect the predicted values for the range smaller than 10 cm and above our intended 25 cm.

The linear equation can then be used to predict the sensor output for input values within the range used for the approximation. This approximation is useful in applications where the sensor response is known to be linear, as it simplifies the sensor behavior into a single equation. However, it should be noted that this approximation may not be accurate for input values outside the range used for the approximation, e.g., above 25 cm.

The correlation of the regression lines determined this way is statistically significant ($p < 0.01$) and has a coefficient of determination of 0.924 and a standard error of $5.5e^{-6}$. However, this calibration function cannot be applied for a long time because the electrical and mechanical behavior of the textiles differs significantly after just a few hours.

The following Table I shows the minimum, average and maximum resistance values for a test series of three days. In the course of the measurement, all recorded statistical characteristics increase by around 10 kΩ, with the greatest change occurring during this period of time.

TABLE I
STATISTICS OF RESISTANCE VALUES AT START AND DURING TESTS AND AFTER PROLONGED PERIODS OF TIME

	0 h	**6 h**	**12 h**	**24 h**	**72 h**
min	3.2 $k\Omega$	8.7 $k\Omega$	11.3 $k\Omega$	11.8 $k\Omega$	12.2 $k\Omega$
mean	8.7 $k\Omega$	15.5 $k\Omega$	16.8 $k\Omega$	17.6 $k\Omega$	18.4 $k\Omega$
max	14.6 $k\Omega$	22.8 $k\Omega$	29.2 $k\Omega$	23.4 $k\Omega$	24.3 $k\Omega$

Despite the significant change in resistance over a period of 72 hours, the general behavior of the sensor largely corresponds to the original measurement of Fig. 4, although the noise has increased significantly throughout the measurement range. Since the measured resistance values are no longer in the original measuring range after 72 hours, it is no longer possible to assign the acting variable or the change in length. Therefore, a second calibration function was created, which better represents the similar behavior with new measured values. This calibration function assumes a similar usage pattern and compares the statistical characteristics of the last set of measurements with the original training dataset. For comparison, Fig. 5 shows the course over three measurement curves after 72 hours.

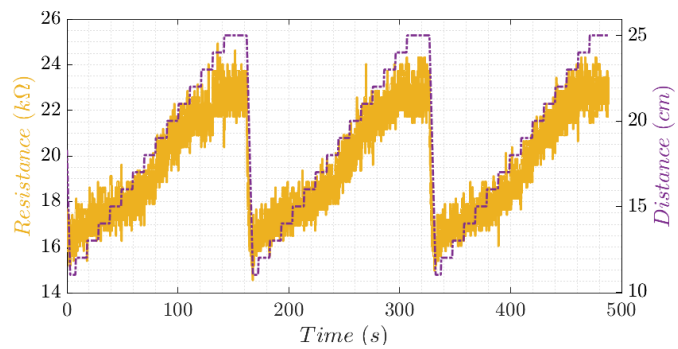

Fig. 5. The graph after 72 hours shows a similar behavior, with a significant increase in the overall resistance of the textile. The textile resistance is shown in yellow, the change in distance is shown in purple.

If the calibration is repeated with linear regression using the statistical characteristics by plotting both side by side, one can see the similarity of both calibration curves. In Fig. 6 the calibration curve of the first measurements in Fig. 4 and the last three measurements in Fig. 5 can be seen. The box shown here is the range of all resistance values as well as the test lengths used in the experiments. Linear regression can also be used to calculate the deflection of other recorded values, guaranteeing a minimal error for the range inside the box only. The shift of the calibration function from left to right shows the wear-related offset. The slope of the calibration functions is almost identical for all recorded measurement periods, since all functions differ only in their offset on the x-axis or in the base resistance.

IV. DISCUSSION

Due to the constant drift of the measured values from the textile sensors, the original sensor calibration can no longer be used after a brief period of time, like our 72 hours. Therefore, further calibrations must be performed on the microcontroller. Algorithms that can be used due to hardware limitations include curve fitting, zero offset calibration, gain calibration, linear regression, or lookup tables. Lookup tables for the course of sensor drift assume that sensor wear always occurs uniformly. That this is not the case has already been shown for similar sensors in long-term load tests in [18] and [27]. Zero-offset calibration requires measurements without load or when the input should be close to its base. As it depends on the

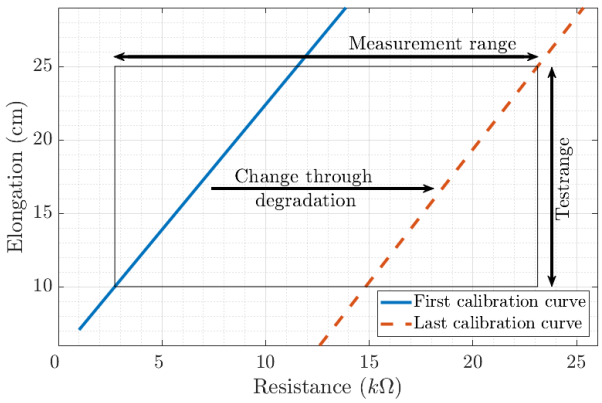

Fig. 6. The plot shows the initial calibration function from measured resistances in blue. The resistance of the sensor increases steadily (shifts right) due to the degradation of the material. After 72 hours, the red dotted calibration curve shows the resulting error, compared to the initial function. No resistance values overlap, a prediction with the initial curve is not possible.

application, and therefore since a force-free measurement cannot be guaranteed, this method is not optimal for mobile use. Gain calibration requires additional measurements at known forces or input levels to compensate for offset and gain errors. As mobile use is intended, a reference measurement on a test bench, such as during calibration, cannot be a prerequisite. As sensor characteristics remained similar during the tests shown in Fig. 4 and Fig. 5 and only an offset of minima, maxima, and mean values was measured, this method seems more promising for mobile calibration. The statistics recorded directly in the microcontroller about minimum values, maximum values, and mean values could be used for better drift compensation by adjusting the reference limits. After the drift was measured and subsequent compensation in the microcontroller was achieved, similar accuracies were achieved as after the initial calibration was again achieved.

Another example of material degradation effects in conductive textile sensors can be found in [27]. The sensor characteristic curve exhibited overshooting behavior during cyclic expansion. This behavior was found to depend on the speed of movement during the test phase, with measured resistance tending to exceed the speed of movement. Furthermore, the average resistance increased over 260 load cycles. An analysis of the test segments at the beginning and end of a 14-day test showed that the resistance measured was again significantly higher, especially with fast movements. This trend was observed to be linear and was found to be independent of the applied stress model. Despite a change in resistance over several $k\Omega$, the overall behavior remained the same.

Another practical example from [27] was found with repeated compressive forces. In contrast to tensile loads, compressive forces do not result in rearrangement effects in textiles. The same nominal values in long-term tests are more influenced by external factors. The long-term trend showed that resistance varies significantly with the applied forces over the duration of the load, particularly with small forces. It should be noted that the textile sensor in this work did not show a linear characteristic curve, but also expressed a logarithmic degradation of the conductivity, which makes an adaptive calibration all the more important.

Calibrating sensors on a microcontroller provides a secure and efficient way to process and analyze data in real-time without transmitting it to a central server. This approach helps protect sensitive data and reduces the risk of data breaches. Transmitting data to a central server for analysis requires increased bandwidth and storage capacity, which can be costly and inefficient. Furthermore, by calibrating sensors on a microcontroller, the device can perform real-time data analysis and decision making, which is critical in applications such as industrial control systems or medical devices where timely decisions are required. The ability to process data on the device itself minimizes the time required for data transmission and processing, resulting in faster and more efficient decision making.

In contrast to zero-offset calibration and gain compensation, small fluctuations or changes in the motion pattern only have a minor impact on the sensor calibration and thus on the measured variables. A sufficiently large amount of memory is required on the microcontroller for the calculation. Experiments with the exponential moving average were performed to make it easier and more resource-saving. With the knowledge of the sensor behavior from the calibration with known nominal values, models can be developed, which are only adjusted with reference measurements during operation.

V. Conclusion

This paper presents a new way of addressing the difficulties associated with the long-term use of conductive textiles as sensors, a significant area of research for the sustainable use of smart textiles. The main improvement over the current state-of-the-art is the development of straightforward techniques for counteracting the effects of aging and deterioration on textile sensors in mobile scenarios, using resource-limited embedded systems. Through accelerated aging tests and cyclic stress tests, we demonstrate how integrated measurement circuits can be used to detect aging and wear effects and how resource-limited microcontrollers are employed for compensation. We also provide a software-based solution to supplement mechanical protective measures. We were able to show that after the initial calibration and model determination, no further communication with a server structure is necessary for the adaptation of sensor models or their drift compensation. As material degradation is highly dependent on the type (e.g. mechanical or chemical) and previous influences, future improvements will include additional textiles that will mainly be used for the detection of degradation. In this way, not only the initial sensing element can be used for compensation, but additional material components will be able to differentiate between different influences. A potential extension is a classifier that is capable of recognizing the type of degradation to optimally compensate for sensor readings.

References

[1] N. Obwaller, J. Langer, and F. Eibensteiner, "Smart clothing for detecting pressure-sensitive gestures," *2019 IEEE 13th International Conference on Application of Information and Communication Technologies (AICT)*, 2019.

[2] P. Petz, F. Eibensteiner, and J. Langer, "Performance evaluation of conductive textiles for movement pattern recognition in smart socks," in *2019 International Conference on Information and Digital Technologies (IDT)*. IEEE, 2019, pp. 370–375.

[3] T. Preindl, C. Honnet, A. Pointner, R. Aigner, J. A. Paradiso, and M. Haller, "Sonoflex: Embroidered speakers without permanent magnets," in *Proceedings of the 33rd Annual ACM Symposium on User Interface Software and Technology*, S. Iqbal, K. MacLean, F. Chevalier, and S. Mueller, Eds. New York, NY, USA: ACM, 2020, pp. 675–685.

[4] R. Aigner, M. A. Haberfellner, and M. Haller, "spaceR: Knitting Ready-Made, Tactile, and Highly Responsive Spacer-Fabric Force Sensors for Continuous Input," in *Proceedings of the 35th Annual ACM Symposium on User Interface Software and Technology*, ser. UIST '22. New York, NY, USA: Association for Computing Machinery, 2022. [Online]. Available: https://doi.org/10.1145/3526113.3545694

[5] H. Zhao, Y. Zhou, S. Cao, Y. Wang, J. Zhang, S. Feng, J. Wang, D. Li, and D. Kong, "Ultrastretchable and washable conductive microtextiles by coassembly of silver nanowires and elastomeric microfibers for epidermal human–machine interfaces," *ACS Materials Letters*, vol. 3, no. 7, pp. 912–920, 2021.

[6] P. Petz, F. Eibensteiner, and J. Langer, "Sensor shirt as universal platform for real-time monitoring of posture and movements for occupational health and ergonomics," *Procedia Computer Science*, vol. 180, pp. 200–207, 2021.

[7] S. Wohlrab, P. Petz, F. Eibensteiner, and J. Langer, "Influences of coating and spandex compositions of conductive textiles used as strain sensors using an automated test system," in *Intelligent Computing*, ser. Lecture Notes in Networks and Systems, K. Arai, Ed. Cham: Springer International Publishing, 2022, vol. 507, pp. 306–321.

[8] P. Petz, F. Eibensteiner, and J. Langer, "Reliability of conductive textile sensors exposed to ageing and prolonged use," in *2022 IEEE International Conference on Flexible and Printable Sensors and Systems (FLEPS)*. IEEE, 2022, pp. 1–4.

[9] B. K. Reck and T. E. Graedel, "Challenges in metal recycling," *Science*, vol. 337, no. 6095, pp. 690–695, 2012.

[10] N. M. van der Velden, K. Kuusk, and A. R. Köhler, "Life cycle assessment and eco-design of smart textiles: The importance of material selection demonstrated through e-textile product redesign," *Materials & Design*, vol. 84, pp. 313–324, 2015.

[11] A. R. Köhler, L. M. Hilty, and C. Bakker, "Prospective impacts of electronic textiles on recycling and disposal," *Journal of Industrial Ecology*, vol. 15, no. 4, pp. 496–511, 2011.

[12] C. Biermaier, C. Gleißner, T. Bechtold, and T. Pham, "Localised catalyst printing for flexible conductive lines by electroless copper deposition on textiles," in *2022 IEEE International Conference on Flexible and Printable Sensors and Systems (FLEPS)*. IEEE, 2022, pp. 1–4.

[13] ——, "The role of citrate in heterogeneous silver metal catalyst formation: A mechanistic consideration," *Arabian Journal of Chemistry*, vol. 16, no. 7, p. 104803, 2023.

[14] P. Nuss and M. J. Eckelman, "Life cycle assessment of metals: a scientific synthesis," *PloS one*, vol. 9, no. 7, p. e101298, 2014.

[15] I. Kazani, C. Hertleer, G. De Mey, A. Schwarz, G. Guxho, and L. Van Langenhove, "Electrical conductive textiles obtained by screen printing," *Fibres & Textiles in Eastern Europe*, vol. 20, no. 1, pp. 57–63, 2012.

[16] T. Hoffmann, B. Eilebrecht, and S. Leonhardt, "Respiratory monitoring system on the basis of capacitive textile force sensors," *IEEE sensors journal*, vol. 11, no. 5, pp. 1112–1119, 2010.

[17] S. Schuler, P. Petz, and F. Eibensteiner, "Feasibility analysis of a textile metal detector utilizing a conductive yarn," in *2022 IEEE International Conference on Flexible and Printable Sensors and Systems (FLEPS)*. IEEE, 2022, pp. 1–4.

[18] C. Biermaier, P. Petz, T. Bechtold, and T. Pham, "Investigation of the functional ageing of conductive coated fabrics under simulated washing conditions," *Materials*, vol. 16, no. 3, p. 912, 2023.

[19] P. Petz, J. Langer, and F. Eibensteiner, "Textile in the loop as automated verification tool for smart textile applications," in *Computer Aided Systems Theory–EUROCAST 2022: 18th International Conference, Las Palmas de Gran Canaria, Spain, February 20–25, 2022, Revised Selected Papers*. Springer, 2023, pp. 215–222.

[20] C. Biermaier, T. Bechtold, and T. Pham, "Towards the functional ageing of electrically conductive and sensing textiles: a review," *Sensors*, vol. 21, no. 17, p. 5944, 2021.

[21] M. Fulton, M. Rezazadeh, and D. Torvi, "Tests for evaluating textile aging," in *Advanced characterization and testing of textiles*. Elsevier, 2018, pp. 93–125.

[22] R. Pinto, D. Carr, M. Helliker, L. Girvan, and N. Gridley, "Degradation of military body armor due to wear: Laboratory testing," *Textile Research Journal*, vol. 82, no. 11, pp. 1157–1163, 2012.

[23] R. B. Barnett and K. Slater, "The progressive deterioration of textile materials. part iii: Laboratory simulation and degradation," *The Journal of The Textile Institute*, vol. 78, no. 3, pp. 220–232, 1987.

[24] P. Petz, C. Biermaier, J. Scharinger, and J. Langer, "Explainable damage models for functional ageing effects in abraded copper coated textiles," *Procedia Computer Science*, 2023.

[25] P. Petz, F. Eibensteiner, and J. Langer, "Reliability of Conductive Textile Sensors Exposed to Ageing and Prolonged Use," in *2022 IEEE International Conference on Flexible and Printable Sensors and Systems (FLEPS)*. IEEE, 2022.

[26] S. Shahrabadi, Y. Castilla, M. Guevara, L. G. Magalhães, D. Gonzalez, and T. Adão, "Defect detection in the textile industry using image-based machine learning methods: a brief review," in *Journal of Physics: Conference Series*, vol. 2224, no. 1. IOP Publishing, 2022, p. 012010.

[27] P. Petz, F. Eibensteiner, and J. Langer, "Nondestructive testing and evaluation of smart textile sensors using embedded systems," in *2022 IEEE 8th International Conference on Smart Instrumentation, Measurement and Applications (ICSIMA)*. IEEE, 2022, pp. 329–334.

[28] C. Fendzi, M. Rebillat, N. Mechbal, M. Guskov, and G. Coffignal, "A data-driven temperature compensation approach for structural health monitoring using lamb waves," *Structural Health Monitoring*, vol. 15, no. 5, pp. 525–540, 2016.

[29] J.-S. Wang and G.-H. Yang, "Data-driven compensation method for sensor drift faults in digital pid systems with unknown dynamics," *Journal of Process Control*, vol. 65, pp. 15–33, 2018.

[30] L. Jiang, D. Djurdjanovic, and J. Ni, "A new method for sensor degradation detection, isolation and compensation in linear systems," in *ASME International Mechanical Engineering Congress and Exposition*, vol. 43033, 2007, pp. 1089–1101.

[31] X. Dong, S. Han, A. Wang, and K. Shang, "Online inertial machine learning for sensor array long-term drift compensation," *Chemosensors*, vol. 9, no. 12, p. 353, 2021.

[32] M. Aliaghasarghamish and S. Ebrahimi, "Recursive least squares fuzzy modeling of chemoresistive gas sensors for drift compensation," in *2011 International Symposium on Innovations in Intelligent Systems and Applications*, 2011, pp. 1–5.

[33] V. Cevher and J. H. McClellan, "Sensor array calibration via tracking with the extended kalman filter," in *2001 IEEE International Conference on Acoustics, Speech, and Signal Processing. Proceedings (Cat. No. 01CH37221)*, vol. 5. IEEE, 2001, pp. 2817–2820.

[34] A. J. Smola and B. Schölkopf, "A tutorial on support vector regression," *Statistics and computing*, vol. 14, pp. 199–222, 2004.

[35] F. M. Heckmeier and C. Breitsamter, "Aerodynamic probe calibration using gaussian process regression," *Measurement Science and Technology*, vol. 31, no. 12, p. 125301, 2020.

[36] G. Li, J. Xiong, R. Tang, S. Sun, and C. Wang, "In-situ sensor calibration for building hvac systems with limited information using general regression improved bayesian inference," *Building and Environment*, vol. 234, p. 110161, 2023.

[37] P. Dutta and A. Kumar, "Intelligent calibration technique using optimized fuzzy logic controller for ultrasonic flow sensor," *Mathematical Modelling of Engineering Problems*, vol. 4, no. 2, pp. 91–94, 2017.

[38] J. W. Hines, A. V. Gribok, I. Attieh, and R. E. Uhrig, "Improved methods for on-line sensor calibration verification," in *Proceedings of the 8 the International Conference on Nuclear Engineering*. Citeseer, 2000.